Work Order ID 48369

Friday, June 26, 2009 9:19:37 AM

Item ID: D3579-048
Revision ID: C
Item Name: Shoulder Harness

Accept

Setup **Start**
Stop

Start Date: 7/15/2009 **Start Qty:** 8.00
Required Date: 8/3/2009 **Req'd Qty:** 8.00
Reference:

Cust Item ID:
Customer:

Run **Start**
Stop

Approvals: **Process Plan:** _____ **Date:** _____ **Tooling:** _____ **Date:** _____
QC: _____ **Date:** _____ **SPC (Y/N):** _____ **Date:** _____

Sequence ID/ Work Center ID	Operation Description	Set Up/ Run Hours	Draw Number	Draw Rev.	Plan Code	Accept Qty	Reject Qty	Reject Number	Insp. Stamp
Draw Nbr	**Revision Nbr**								
D3579	Rev C								
100 Purchasing	PURCHASING	0.00							
Purchasing	**Memo** Issue P/O: 8910 CZ09/06/03 □P/N:5-01-2M0701□Possible supplier:Schoth Safty Products□Certficate of conformaty is required	0.00 (8)							
110 Packaging	Receive & Inspect for Damage & Mat'l Certs	0.00							
Packaging	**Memo** Ensure certificate of conformity is attached	0.00 Pu 8/7/2 (8)							
120 QC	QC5- Inspect part completeness to step on W/O	0.00 => Sol 10/7/02 (XE)							
Quality Control	**Memo**	0.00							

Work Order ID 48369

Friday, June 26, 2009 9:19:37 AM

Item ID: D3579-048
Revision ID: C
Item Name: Shoulder Harness

Accept

Setup Start
Stop

Start Date: 7/15/2009 **Start Qty:** 8.00
Required Date: 8/3/2009 **Req'd Qty:** 8.00
Reference:

Cust Item ID:
Customer:

Run Start
Stop

Approvals: **Process Plan:** _____ **Date:** _____ **Tooling:** _____ **Date:** _____
QC: _____ **Date:** _____ **SPC (Y/N):** _____ **Date:** _____

Sequence ID/ Work Center ID	Operation Description	Set Up/ Run Hours	Draw Number	Draw Rev.	Plan Code	Accept Qty	Reject Qty	Reject Number	Insp. Stamp
130		0.00							
Small Fab	Small Fab					SB	09/07 08		8
	Memo	0.00							
Small Fab	Apply Decals as per Dwg 3579 Using 3M Marine Adhesive□AR 5200 BATCH: ~~[illegible]~~ ~~[illegible]~~ #1 108091		3M						
140	QC5- Inspect part completeness to step on W/O	0.00							
QC									
Quality Control	**Memo**	0.00							
150	Identify as per dwg & Stock Location: 273	0.00							
Packaging						9/7/8	8	SB	
Packaging	**Memo**	0.00							

Picklist Print

Friday, June 26, 2009 9:19:37 AM

Work Order ID: 48369

Parent Item: D3579-048RevC

Parent Item Name: Shoulder Harness

Comments:

Start Date: 7/15/2009 **Required Date:** 8/3/2009

Start Qty: 8.00 **Required Qty:** 8.00

Component Item ID/ Item Name	Replacement Item ID	Mfg/ Purch	Bin Item	Primary Location	Last Location	Route Seq ID	Unit of Measure	Qty on Hand	Remaining Qty To Pick	Qty Issued	Date Issued	Status
D3569-3RevA		Manufactured	No	B 47626 (4)	B 47717	100	Each	0.0000	8.0000		07/07/07	
Decal 5-01-2M0701 ~~55~~ 48368		Purchased	No			130	Each	0.0000	8.0000			
SHOULDER HARNESS RH												

Date: Wednesday, 03/06/2009 10:50:34 AM
User: Julie Dawson

Process Sheet

Customer : CU-DAR001 Dart Helicopters Services
Job Number : 48369
Estimate Number : 12852
P.O. Number :
This Issue : 03/06/2009 **S.O. No.** :
Prsht Rev. : NC
First Issue : / / **Type** : PURCHASED PARTS
Previous Run : 47535
Written By :
Checked & Approved By : JLD 09.06.03
Comment : Est Rev:A New Issue 07-04-27 JLM
Est Rev:B Added Decals 07-07-06 JLM

Drawing Name : SHOULDER HARNESS
Part Number : D3579048
Drawing Number : D3579 REV C
Project Number : N/A
Drawing Revision : C
Material :
Due Date : 30/06/2009 **Qty:** 8 **Um:** Each

Additional Product

Job Number:

Seq. #:	Machine Or Operation:	Description :
1.0	PG	PURCHASING

Comment: PURCHASING
Issue P/O: 8910 C2090603
P/N:5-01-2M0701
Possible supplier:Schoth Safty Products
Certficate of conformaty is required
(8)

2.0	5012M0701	SHOULDER HARNESS RH

Comment: Qty.: 1.0000 Each(s)/Unit Total : 8.0000 Each(s)
SHOULDER HARNESS LH

3.0	PACKAGING 1	PACKAGING RESOURCE #1

Comment: PACKAGING RESOURCE #1
Receive & Inspect For Transit Damage
Ensure certificate of conformity is attached

4.0	QC5	INSPECT WORK TO CURRENT STEP

Comment: INSPECT WORK TO CURRENT STEP S 07/07/02 (8)

5.0	D35693	Decal

Comment: Qty.: 1.0000 Each(s)/Unit Total : 8.0000 Each(s)
DECAL
Batch: B 47626 (4) B 47717 (4)

Dart Aerospace Ltd

W/O:		WORK ORDER CHANGES					
DATE	STEP	PROCEDURE CHANGE	By	Date	Qty	Approval Chief Eng / Prod Mgr	Approval QC Inspector

Part No: _____ **PAR #:** _____ **Fault Category:** _____ **NCR:** Yes No **DQA:** _____ **Date:** _____

Resolution: _____ **Disposition:** _____ **QA: N/C Closed:** _____ **Date:** _____

NCR:		WORK ORDER NON-CONFORMANCE (NCR)						
DATE	STEP	Description of NC Section A	Corrective Action Section B			Verification Section C	Approval Chief Eng	Approval QC Inspector
			Initial Chief Eng	Action Description Chief Eng	Sign & Date			

NOTE: Date & initial all entries

Date: Wednesday, 03/06/2009 10:50:34 AM
User: Julie Dawson

Process Sheet

Customer: CU-DAR001 Dart Helicopters Services **Drawing Name:** SHOULDER HARNESS

Job Number: 48369 **Part Number:** D3579048

Job Number:

Seq. #:	Machine Or Operation:	Description :
6.0	SMALL FAB 1	SMALL & MEDIUM FAB RESOURCE 1

Comment: SMALL & MEDIUM FAB RESOURCE 1
Apply Decals as per Dwg 3579 Using 3M Marine Adhesive

AR 3M 5200 BATCH: M 108081 SB 09/07/08 (8)

7.0	QC5	INSPECT WORK TO CURRENT STEP

(F048)

Comment: INSPECT WORK TO CURRENT STEP SB 09/07/08 (KB)

8.0	PACKAGING 1	PACKAGING RESOURCE #1

Comment: PACKAGING RESOURCE #1
Identify and Stock
Location:_____

9.0	QC21	FINAL INSPECTION/W/O RELEASE

Comment: FINAL INSPECTION/W/O RELEASE

Job Completion

Dart Aerospace Ltd

W/O:		WORK ORDER CHANGES					
DATE	STEP	PROCEDURE CHANGE	By	Date	Qty	Approval Chief Eng / Prod Mgr	Approval QC Inspector

Part No: _____ **PAR #:** _____ **Fault Category:** _____ **NCR:** Yes No **DQA:** _____ **Date:** _____

Resolution: _____ **Disposition:** _____ **QA: N/C Closed:** _____ **Date:** _____

NCR:		WORK ORDER NON-CONFORMANCE (NCR)						
DATE	STEP	Description of NC Section A	Corrective Action Section B			Verification Section C	Approval Chief Eng	Approval QC Inspector
			Initial Chief Eng	Action Description Chief Eng	Sign & Date			

NOTE: Date & initial all entries

H:\fFORMS\Quality Assurance\approved QA\NCRWO RevE

DESIGN	DRAWN BY	DART AEROSPACE LTD HAWKESBURY, ONTARIO, CANADA	
LE	LE		
CHECKED	APPROVED	DRAWING NO.	REV. C
		D3579	SHEET 1 OF 4
DATE		TITLE	SCALE
07.06.27		SHOULDER HARNESS	NTS

A	07.01.12	NEW ISSUE
B	07.06.01	CHG REEL FOR -045/-046/-047/-048
C	07.06.27	ADD D3569 DECALS AND NOTE 6

SPECIFICATION CONTROL DRAWING

RELEASED 07-06-27

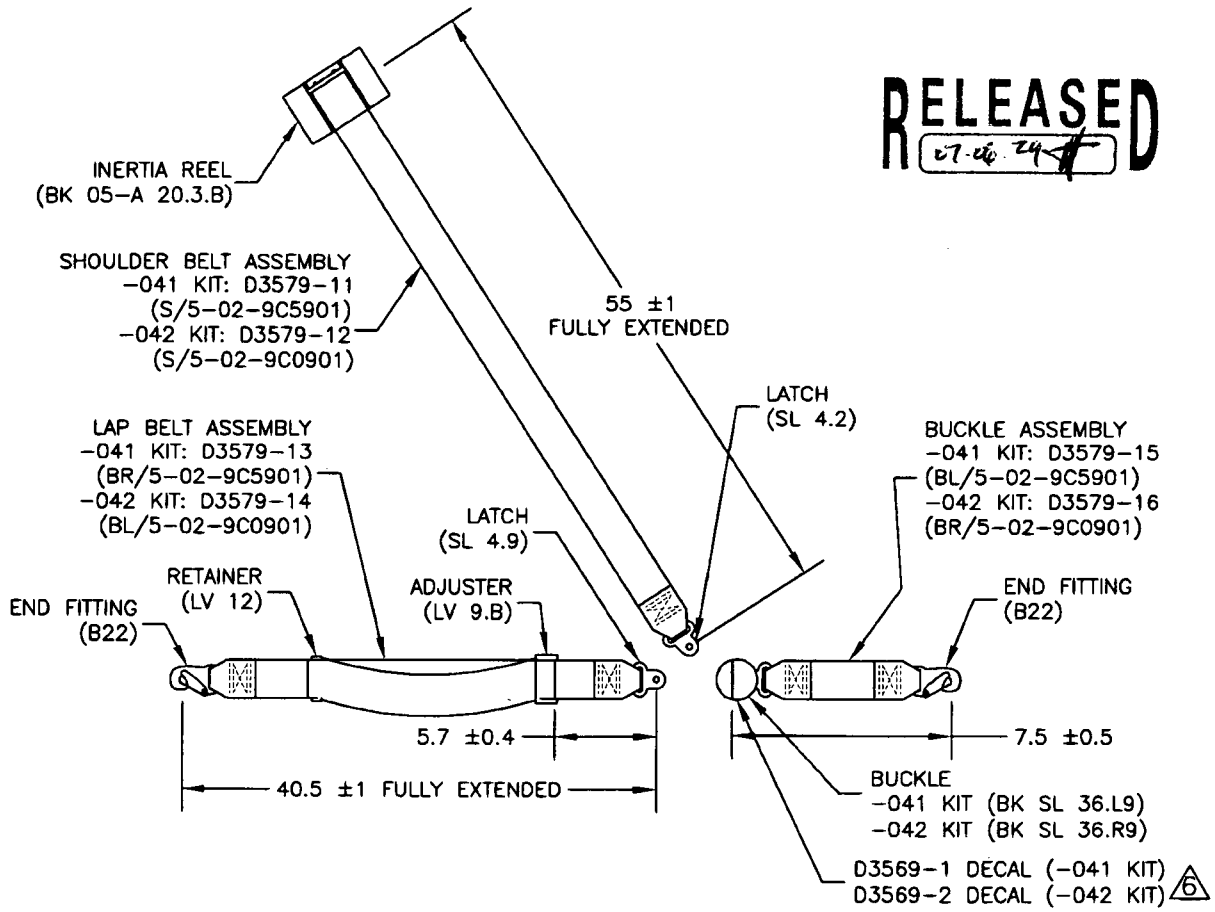

D3579-041 SHOULDER HARNESS (SHOWN)
D3579-042 SHOULDER HARNESS (OPPOSITE)

D3579-041/-042 HARNESS ASSEMBLY NOTES:

1) DESCRIPTION: 3-POINT SHOULDER HARNESS WITH PUSH-BUTTON BUCKLE
MEETS REQUIREMENTS OF TSO-C114
CHROME HARDWARE PLATING AND BLACK WEBBING
2) PURCHASE INFO: P/N 5-02-9C5901 (D3579-041)
P/N 5-02-9C0901 (D3579-042)
SCHROTH SAFETY PRODUCTS, Pompano Beach, Fl.
3) ALL BELTS TO BE LABELLED PER FAR 21.607 USING LAMINATED TAGS
ADDITIONAL TEXT ON LABELS: "DART AEROSPACE LTD. P/N D3579-041/-042"
4) PART NUMBERS IN BRACKETS REPRESENT SUPPLIER (SCHROTH) PART NUMBERS
5) ALL DIMENSIONS ARE IN INCHES UNLESS OTHERWISE NOTED
6) APPLY DECAL USING 3M MARINE ADHESIVE SEALANT 5200 PER QSI 015

SHOP COPY
RETURN TO
ENGINEERING
UNCONTROLLED COPY
SUBJECT TO AMENDMENT
WITHOUT NOTICE
WORK ORDER
NO. 4839

Copyright © 2007 by DART AEROSPACE LTD
THIS DOCUMENT IS PRIVATE AND CONFIDENTIAL AND IS SUPPLIED ON THE EXPRESS CONDITION THAT IT IS NOT TO BE USED FOR ANY PURPOSE OR COPIED OR COMMUNICATED TO ANY OTHER PERSON WITHOUT WRITTEN PERMISSION FROM DART AEROSPACE LTD.

DESIGN	DRAWN BY	DART AEROSPACE LTD HAWKESBURY, ONTARIO, CANADA	
LE	LE		
CHECKED	APPROVED	DRAWING NO.	REV. C
		D3579	SHEET 2 OF 4
DATE		TITLE	SCALE
07.06.27		SHOULDER HARNESS	NTS

SPECIFICATION CONTROL DRAWING

RELEASED 07.06.29

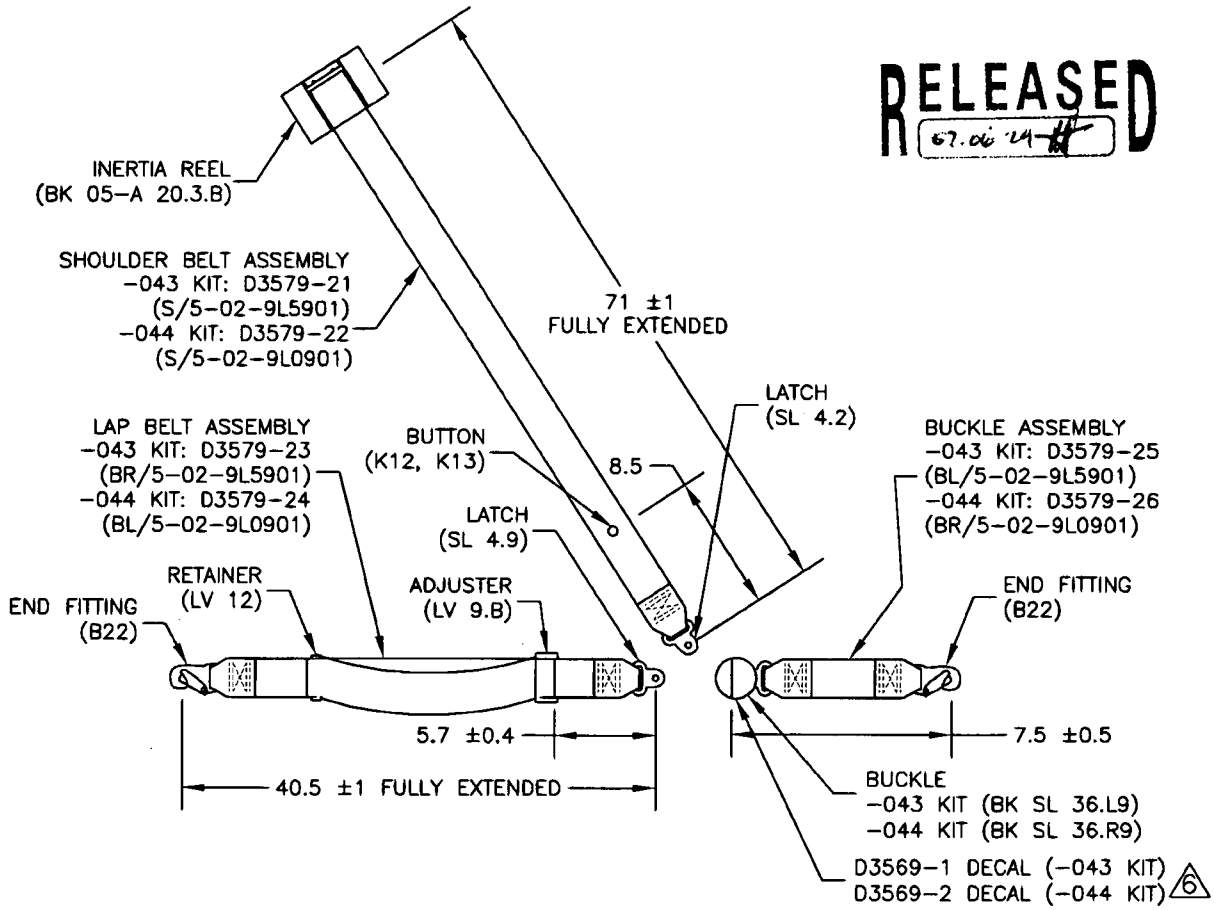

D3579-043 SHOULDER HARNESS (SHOWN)
D3579-044 SHOULDER HARNESS (OPPOSITE)

D3579-043/-044 HARNESS ASSEMBLY NOTES:

1) DESCRIPTION: 3-POINT SHOULDER HARNESS WITH PUSH-BUTTON BUCKLE
   MEETS REQUIREMENTS OF TSO-C114
   CHROME HARDWARE PLATING AND BLACK WEBBING
2) PURCHASE INFO: P/N 5-02-9L5901 (D3579-043)
   P/N 5-02-9L0901 (D3579-044)
   SCHROTH SAFETY PRODUCTS, Pompano Beach, Fl.
3) ALL BELTS TO BE LABELLED PER FAR 21.607 USING LAMINATED TAGS
   ADDITIONAL TEXT ON LABELS: "DART AEROSPACE LTD. P/N D3579-043/-044"
4) PART NUMBERS IN BRACKETS REPRESENT SUPPLIER (SCHROTH) PART NUMBERS
5) ALL DIMENSIONS ARE IN INCHES UNLESS OTHERWISE NOTED
6) APPLY DECAL USING 3M MARINE ADHESIVE SEALANT 5200 PER QSI 015

SHOP COPY
RETURN TO
ENGINEERING
UNCONTROLLED COPY
SUBJECT TO AMENDMENT
WITHOUT NOTICE
WORK ORDER
NO. 48369

Copyright © 2007 by DART AEROSPACE LTD

THIS DOCUMENT IS PRIVATE AND CONFIDENTIAL AND IS SUPPLIED ON THE EXPRESS CONDITION THAT IT IS NOT TO BE USED FOR ANY PURPOSE OR COPIED OR COMMUNICATED TO ANY OTHER PERSON WITHOUT WRITTEN PERMISSION FROM DART AEROSPACE LTD.

DESIGN	DRAWN BY	DART AEROSPACE LTD HAWKESBURY, ONTARIO, CANADA	
LE	LE		
CHECKED	APPROVED	DRAWING NO.	REV. C
		D3579	SHEET 3 OF 4
DATE		TITLE	SCALE
07.06.27		SHOULDER HARNESS	NTS

SPECIFICATION CONTROL DRAWING

RELEASED
07.06.29

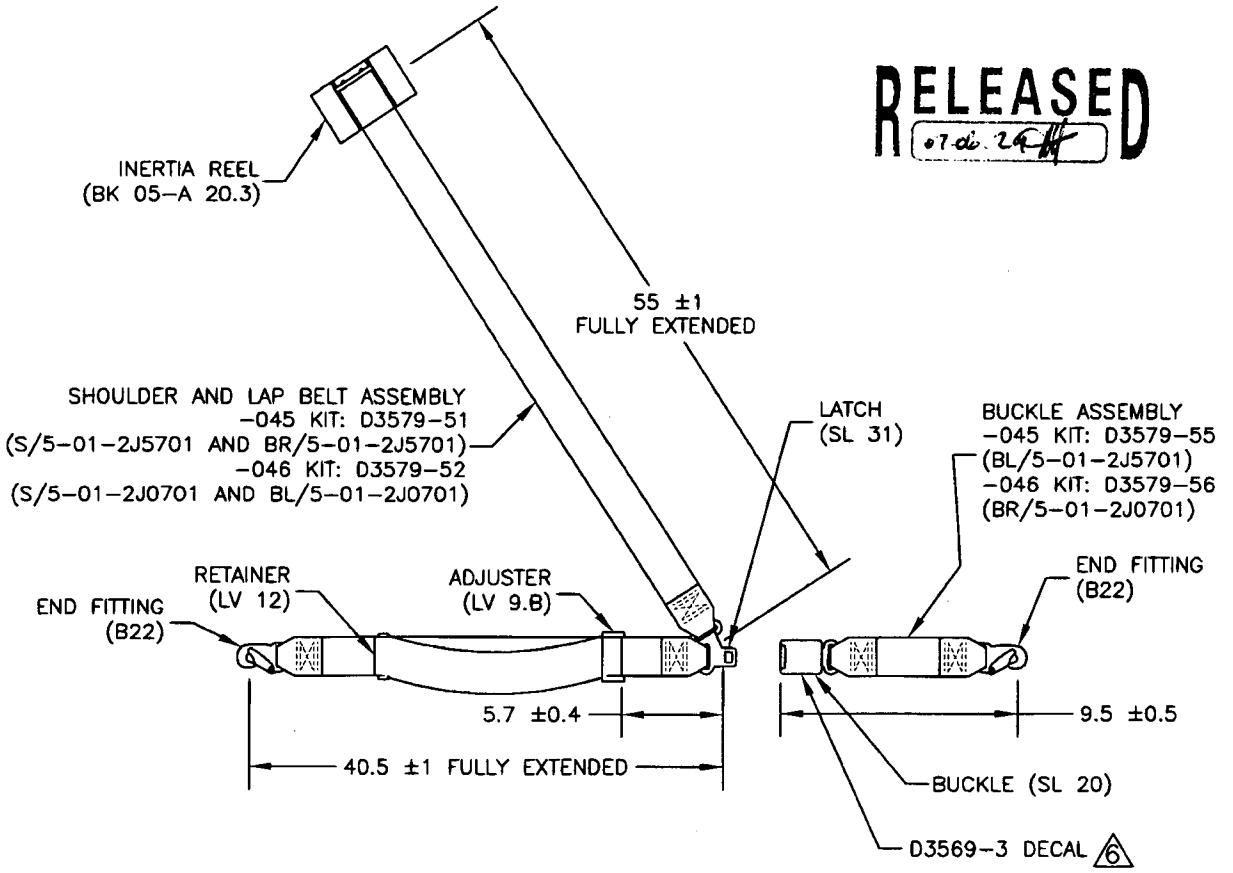

D3579-045 SHOULDER HARNESS (SHOWN)
D3579-046 SHOULDER HARNESS (OPPOSITE)

D3579-045/-046 HARNESS ASSEMBLY NOTES:

1) DESCRIPTION: 3-POINT SHOULDER HARNESS WITH PUSH-BUTTON BUCKLE
   MEETS REQUIREMENTS OF TSO-C114
   CHROME HARDWARE PLATING AND BLACK WEBBING
2) PURCHASE INFO: P/N 5-01-2J5701 (D3579-045)
   P/N 5-01-2J0701 (D3579-046)
   SCHROTH SAFETY PRODUCTS, Pompano Beach, Fl.
3) ALL BELTS TO BE LABELLED PER FAR 21.607 USING LAMINATED TAGS
   ADDITIONAL TEXT ON LABELS: "DART AEROSPACE LTD. P/N D3579-045/-046"
4) PART NUMBERS IN BRACKETS REPRESENT SUPPLIER (SCHROTH) PART NUMBERS
5) ALL DIMENSIONS ARE IN INCHES UNLESS OTHERWISE NOTED
6) APPLY DECAL USING 3M MARINE ADHESIVE SEALANT 5200 PER QSI 015

SHOP COPY
RETURN TO
ENGINEERING
UNCONTROLLED COPY
SUBJECT TO AMENDMENT
WITHOUT NOTICE
WORK ORDER
NO. 48369

Copyright © 2007 by DART AEROSPACE LTD
THIS DOCUMENT IS PRIVATE AND CONFIDENTIAL AND IS SUPPLIED ON THE EXPRESS CONDITION THAT IT IS NOT TO BE USED FOR ANY PURPOSE OR COPIED OR COMMUNICATED TO ANY OTHER PERSON WITHOUT WRITTEN PERMISSION FROM DART AEROSPACE LTD.

DESIGN	DRAWN BY	DART AEROSPACE LTD HAWKESBURY, ONTARIO, CANADA	
LE	LE		
CHECKED	APPROVED	DRAWING NO.	REV. C
		D3579	SHEET 4 OF 4
DATE		TITLE	SCALE
07.06.27		SHOULDER HARNESS	NTS

SPECIFICATION CONTROL DRAWING

RELEASED 07-06-29

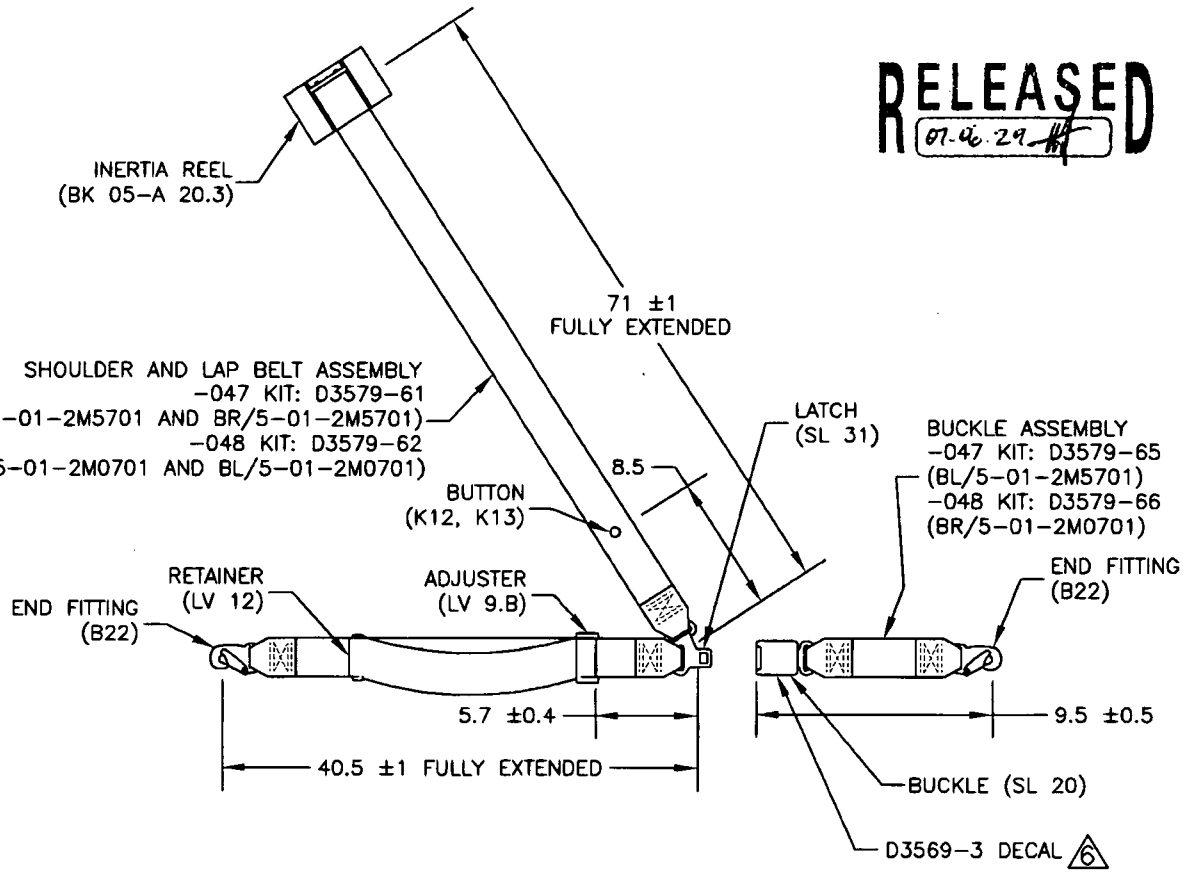

D3579-047 SHOULDER HARNESS (SHOWN)
D3579-048 SHOULDER HARNESS (OPPOSITE)

D3579-047/-048 HARNESS ASSEMBLY NOTES:

1) DESCRIPTION: 3-POINT SHOULDER HARNESS WITH PUSH-BUTTON BUCKLE
   MEETS REQUIREMENTS OF TSO-C114
   CHROME HARDWARE PLATING AND BLACK WEBBING
2) PURCHASE INFO: P/N 5-01-2M5701 (D3579-047)
   P/N 5-01-2M0701 (D3579-048)
   SCHROTH SAFETY PRODUCTS, Pompano Beach, Fl.
3) ALL BELTS TO BE LABELLED PER FAR 21.607 USING LAMINATED TAGS
   ADDITIONAL TEXT ON LABELS: "DART AEROSPACE LTD. P/N D3579-047/-048"
4) PART NUMBERS IN BRACKETS REPRESENT SUPPLIER (SCHROTH) PART NUMBERS
5) ALL DIMENSIONS ARE IN INCHES UNLESS OTHERWISE NOTED
6) APPLY DECAL USING 3M MARINE ADHESIVE SEALANT 5200 PER QSI 015

SHOP COPY
RETURN TO
ENGINEERING
UNCONTROLLED COPY
SUBJECT TO AMENDMENT
WITHOUT NOTICE
WORK ORDER
NO. 48389

Copyright © 2007 by DART AEROSPACE LTD

THIS DOCUMENT IS PRIVATE AND CONFIDENTIAL AND IS SUPPLIED ON THE EXPRESS CONDITION THAT IT IS NOT TO BE USED FOR ANY PURPOSE OR COPIED OR COMMUNICATED TO ANY OTHER PERSON WITHOUT WRITTEN PERMISSION FROM DART AEROSPACE LTD.

Packing Slip

15307

BAE SYSTEMS

BAE Systems Safety Products, Inc.

1371 SW 8th Street, Unit 3 Pompano Beach, FL 33069

Ph: 954-784-3178 Fax: 954-784-3179

7/1/2009

Bill To

DART Aerospace Ltd
1270 Aberdeen St
Hawkesbury, ON K6A 1K7
Canada

Phone: 613-632-5200 Fax: 613-632-5246

Ship To

DART Aerospace Ltd
1270 Aberdeen St
Hawkesbury, ON K6A 1K7
Canada

Order-Line	*Description*	*Qty Shipped*
DAR09010-1	5-01-2M0701RevA restraint,3-pt,rh,reel,601black,P/N D3579-048 DART AEROSPACE LTD, 613-632-3336 P/N D3579-048	8 ea
DAR09010-2	5-01-2J0701RevA restraint,3-pt,da40pax,rh,bolt-on,reel,601black,PND3579-046 Dart Aerospace Ltd, 613-632-3336 P/N D3579-046 **Aircraft SN:** N/A	8 ea

S 08/07/02

Plating: N/A - Not Applicable
Plating P.O.:
Webbing: 601 Black
** Please ship on FedEx Int'l P1 acct# 151793240 **

PO: PO00008910

Notes: DAR09010-1/2

Ship Via: Fedex Int'l P1

Tracking #: 797730331733

FOB: Our Plant

1. Approving National Aviation Authority/Country:	2.	3. Form Tracking Number:
FAA/UNITED STATES	**AUTHORIZED RELEASE CERTIFICATE** **FAA Form 8130-3, AIRWORTHINESS APPROVAL TAG**	DAR09010-1

4. Organization Name and Address:

PT 1662CE BAE Systems Safety Products, Inc. 1371 S.W.8th St. Unit # 3. Pompano Beach Fl, 33069

5. Work Order/Contract/Invoice Number: DAR09010-1

6. Item:	7. Description:	8. Part Number:	9. Eligibility:*	10. Quantity:	11. Serial/Batch Number:	12. Status/Work:
1	Restraint,3-pt.,rh,reel,601 black	5-01-2M0701RevA	N/A	8	Date Mfg.:06/09	NEW

13. Remarks:

EXPORT TO CANADA

EXD 09/07/10

14. Certifies the items identified above were manufactured in conformity to:

☒ Approved design data and are in a condition for safe operation.

☐ Non-approved design data specified in Block 13.

19. ☐ 14 CFR 43.9 Return to Service ☐ Other regulation specified in Block 13

Certifies that unless otherwise specified in block 13, the work identified in Block 12 and described in Block 13 was accomplished in accordance with Title 14, Code of Federal Regulations, part 43 and in respect to that work, the items are approved for return to service.

15. Authorized Signature:	16. Approval/Authorization No.: DMIR-511304-CE	20. Authorized Signature:	21. Approval/Certificate No.:
17. Name (Typed or Printed): Anthony B. LaPointe	18. Date (m/d/y): July / 1 / 2009	22. Name (Typed or Printed):	23. Date (m/d/y):

User/Installer Responsibilities

It is important to understand that the existence of this document alone does not automatically constitute authority to install the part/component/assembly.

Where the user/installer performs work in accordance with the national regulations of an airworthiness authority different than the airworthiness authority of the country specified in Block 1, it is essential that the user/installer ensures that his/her airworthiness authority accepts parts/components/assemblies from the airworthiness authority of the country specified in Block1.

Statements in Blocks 14 and 19 do not constitute installation certification. In all cases, aircraft maintenance records must contain an installation certification issued in accordance with the national regulations by the user/installer before the aircraft may be flown.

BAE Systems Safety Products Inc.
MATERIAL ACCEPTANCE TAG

S
01/07/02

Part Number:	5-01-2M0701RevA		
Serial Number:	06/09	**Quantity:**	8.0
Part Description:	restraint,3-pt,rh,reel,601black,P/N D3579-048		
P.O./W.O. #	DAR09010-1	Cust. PO#:	PO00008910
Vendor/Shop:	Short Seal		
Inspector:	L. Cincus		
Date:	7/1/09	**Approval**	~~SSPC~~ QC 018